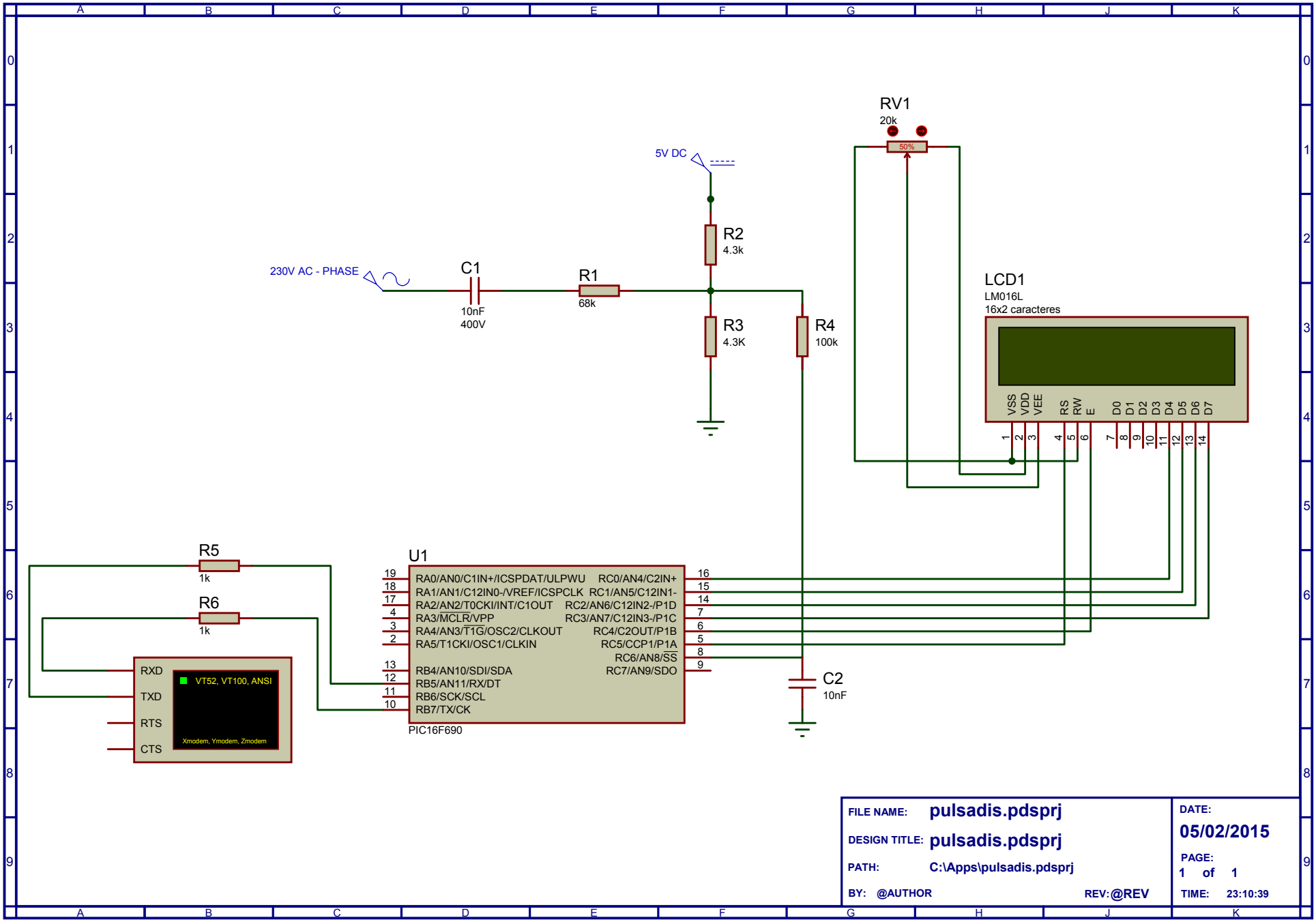

FILE NAME:	pulsadis.pdsprj	DATE:	05/02/2015
DESIGN TITLE:	pulsadis.pdsprj	PAGE:	1 of 1
PATH:	C:\Apps\pulsadis.pdsprj		
BY: @AUTHOR	REV: @REV	TIME:	23:10:39